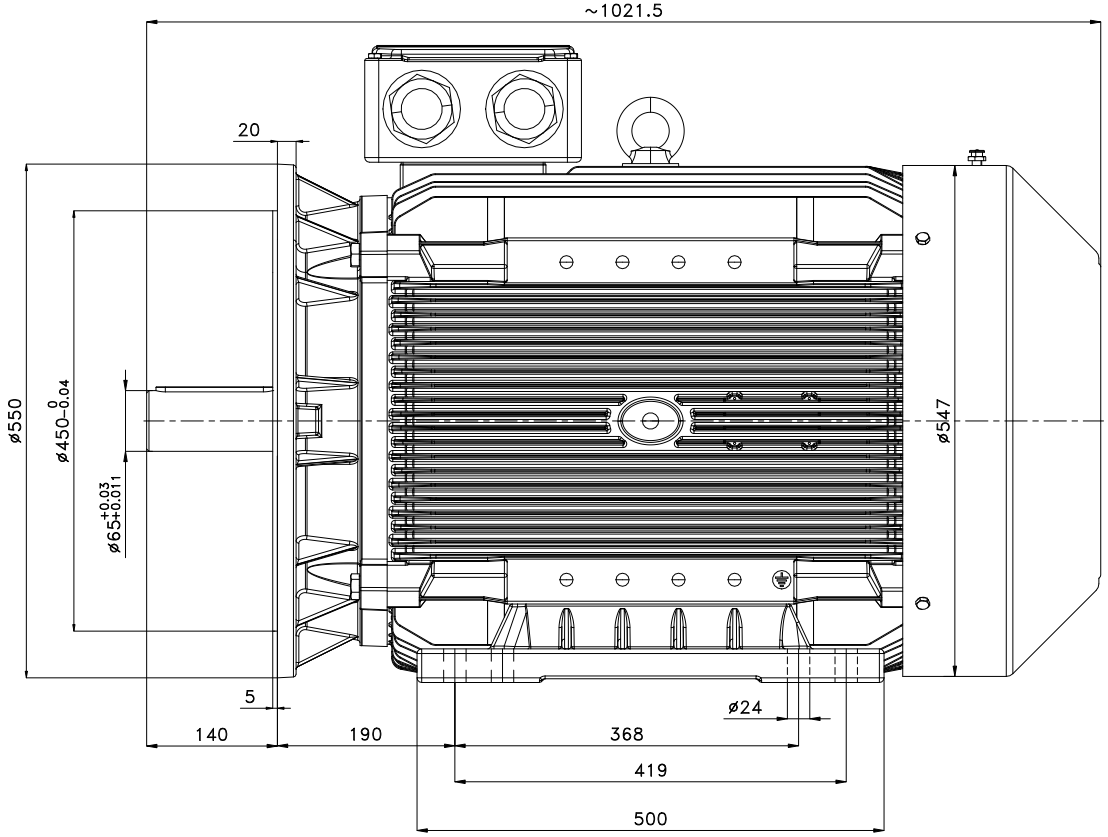

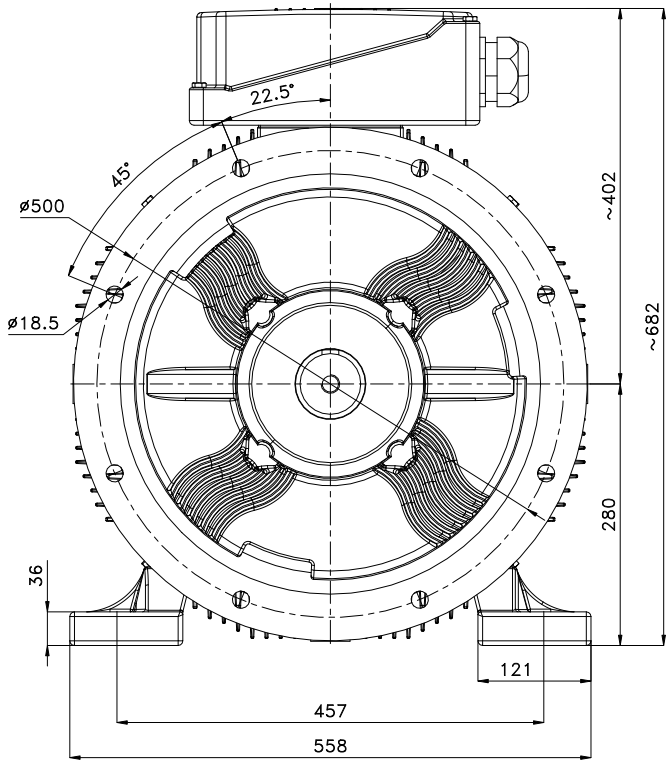

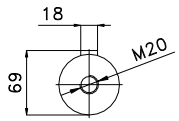

Unit	mm
Date	30/04/2017

3EG280M2X-PA

LSMotion

www.lsmotion.fr

This outline drawing is subject to change