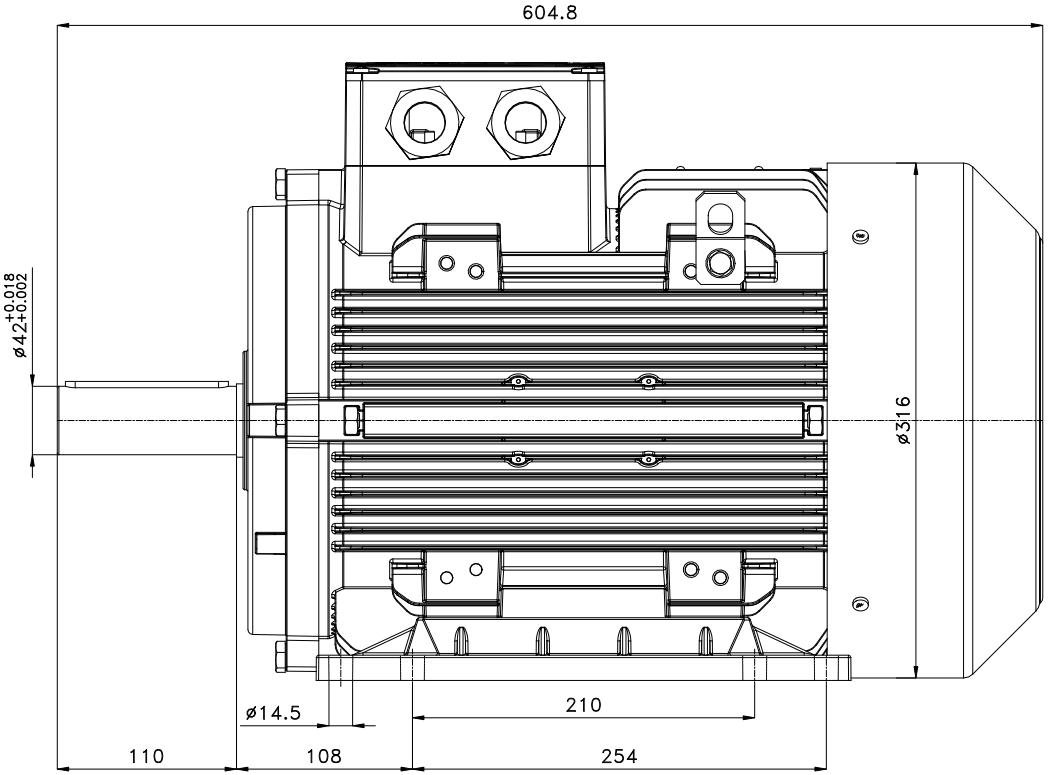


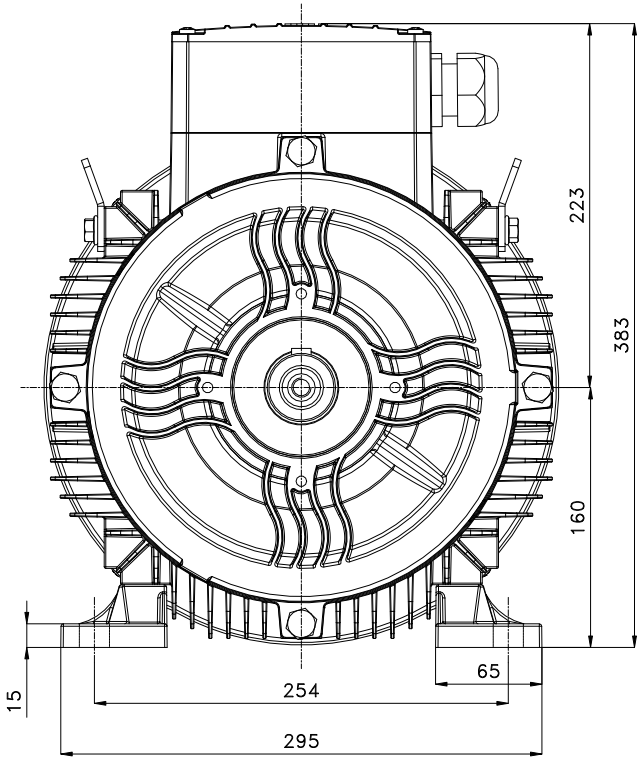


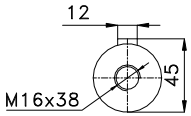


| | |
|---|---|
| Unit | mm |
| Date | 30/04/2017 |

3EL160SXX-PD

LSMotion

www.lsmotion.fr

This outline drawing is subject to change